CUSTOMER DWG

RAM-6

8-20-08

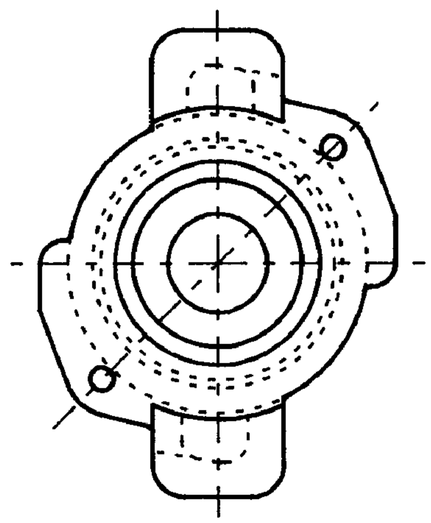

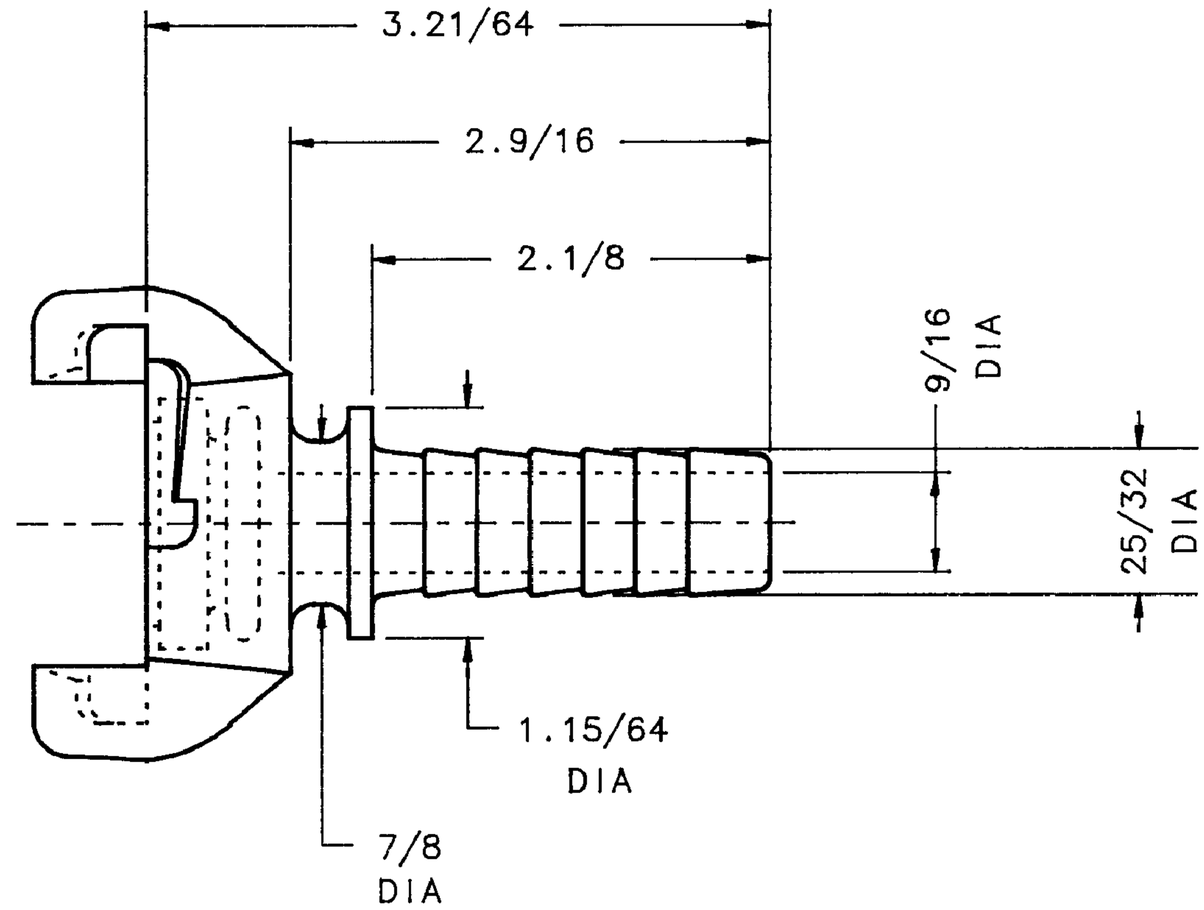

AGREEMENT TO MAINTAIN CONFIDENTIALITY

This drawing is owned by Dixon Valve & Coupling Co. and shall be returned upon demand. It is loaned on condition that it shall not be copied or reproduced or submitted to others without the owners consent. In accepting it subject to this condition the recipient further agrees that this drawing or any design detail or concept disclosed herein shall not be used in any way detrimental to or in competition with the owner. If the recipent does not agree to the terms of this agreement they shall return this drawing immediately.

DIXON

The Right Connection™

DIXON VALVE & COUPLING CO. U. S. A.		
TITLE 3/4" 2 LUG AIR KING COUPLING x HOSE END		
DRWN. MDC 9/7/93	CHKD.	APPR.
MAT'L CF-8M STAINLESS INVESTMENT CASTING	RAM-6	

CUSTOMER DWG